Coffee Table Leg Pattern

COFFEE TABLE PLANS - WOODSMITH #135
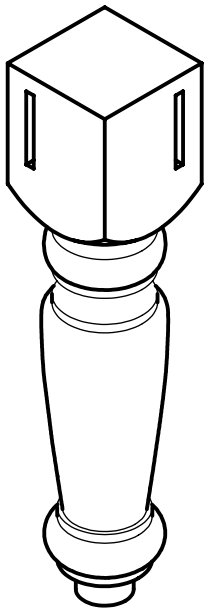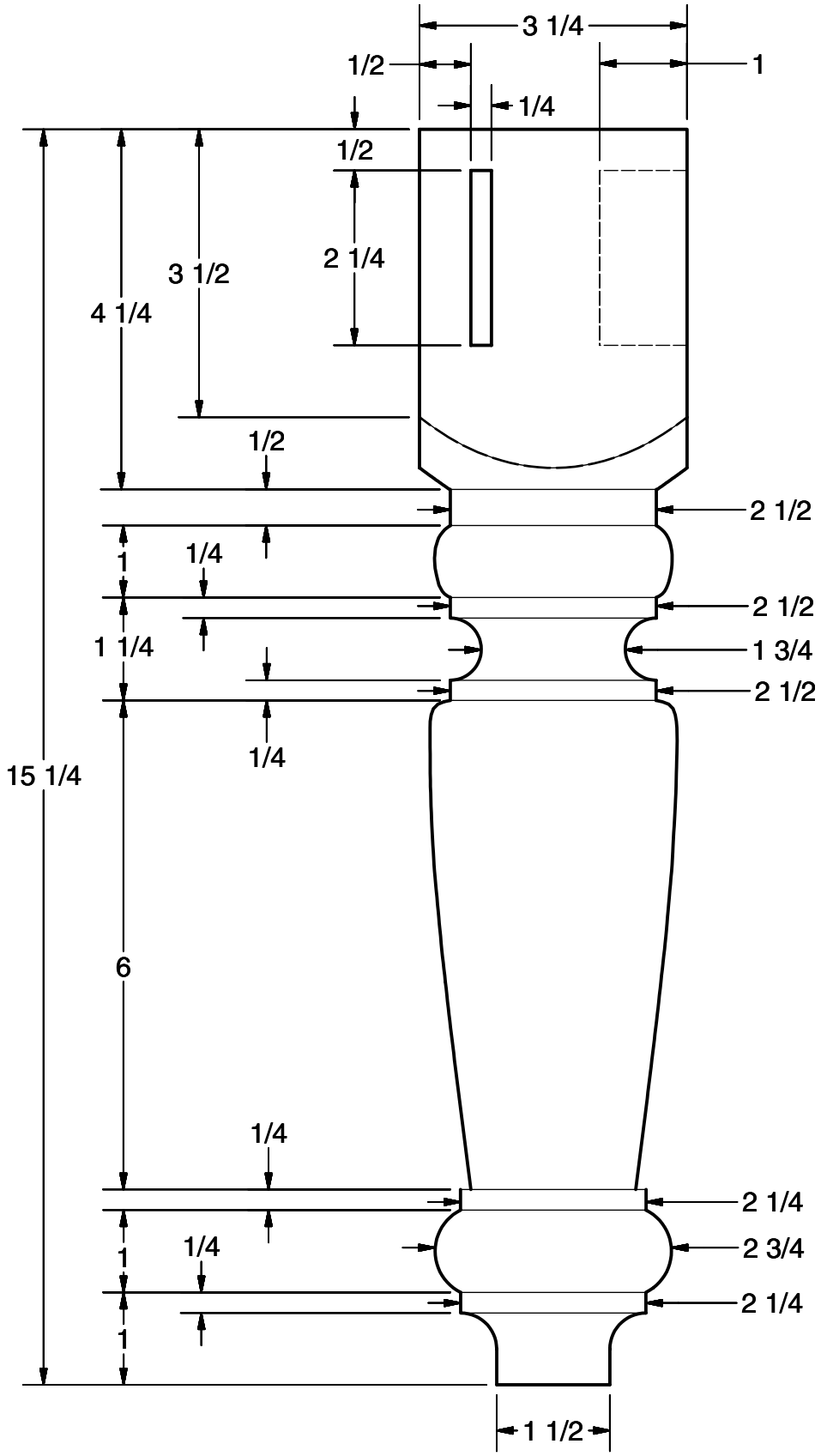
Copyright 2001, August Home Publishing Company.
All Rights Reserved.